HYATT AQUALEA RESORT PROJECT,FL 2009
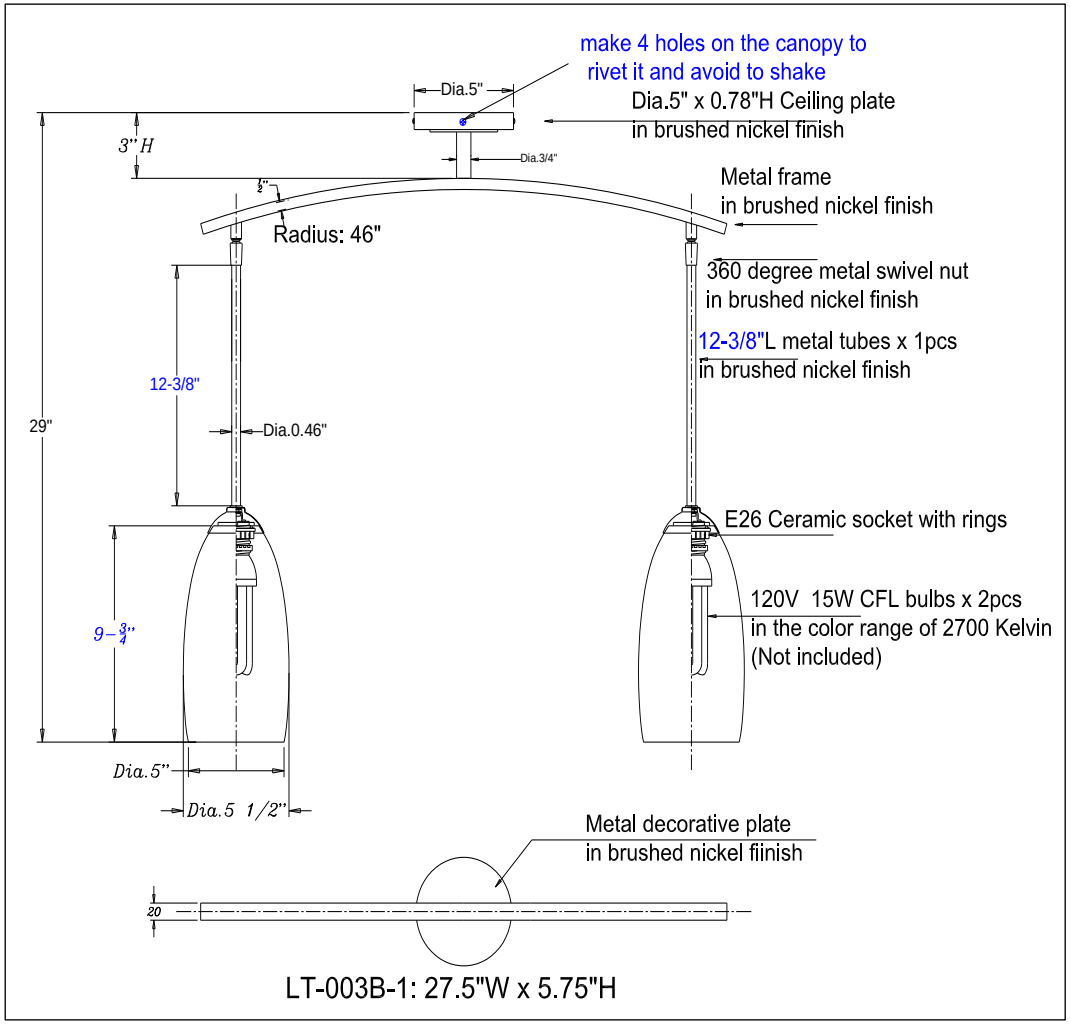
LT-003B DBL PENDANT W/ OPAL ETCHED GLASS SHADE